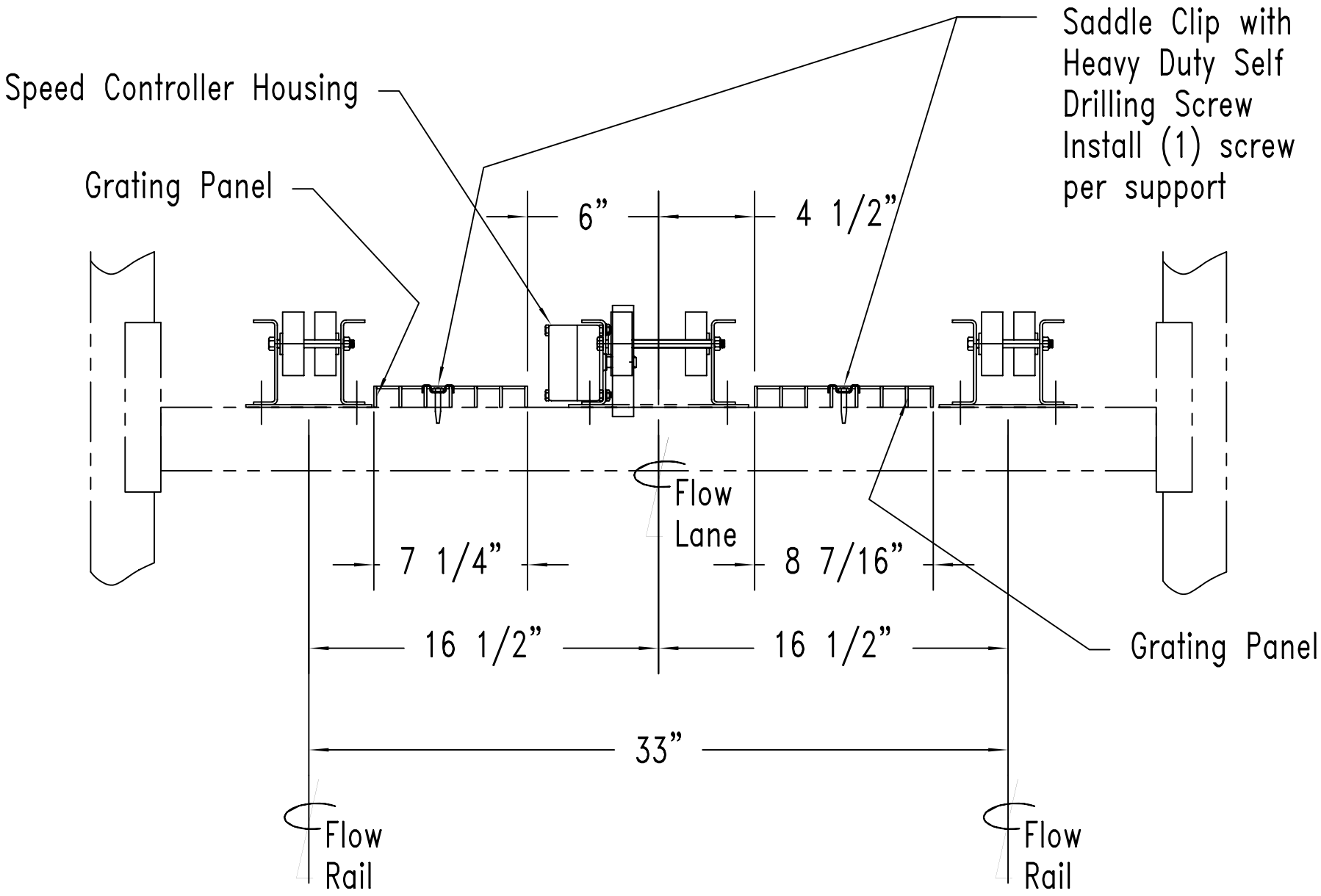
Saddle Clip with
Heavy Duty Self
Drilling Screw
Install (1) screw
per support
Speed Controller Housing
Grating Panel
6”
4 1/2”
Flow
Lane
7 1/4”
8 7/16”
16 1/2”
16 1/2”
Grating Panel
33”
Flow
Rail
Flow
Rail